W30 SŁ P/L

v.1

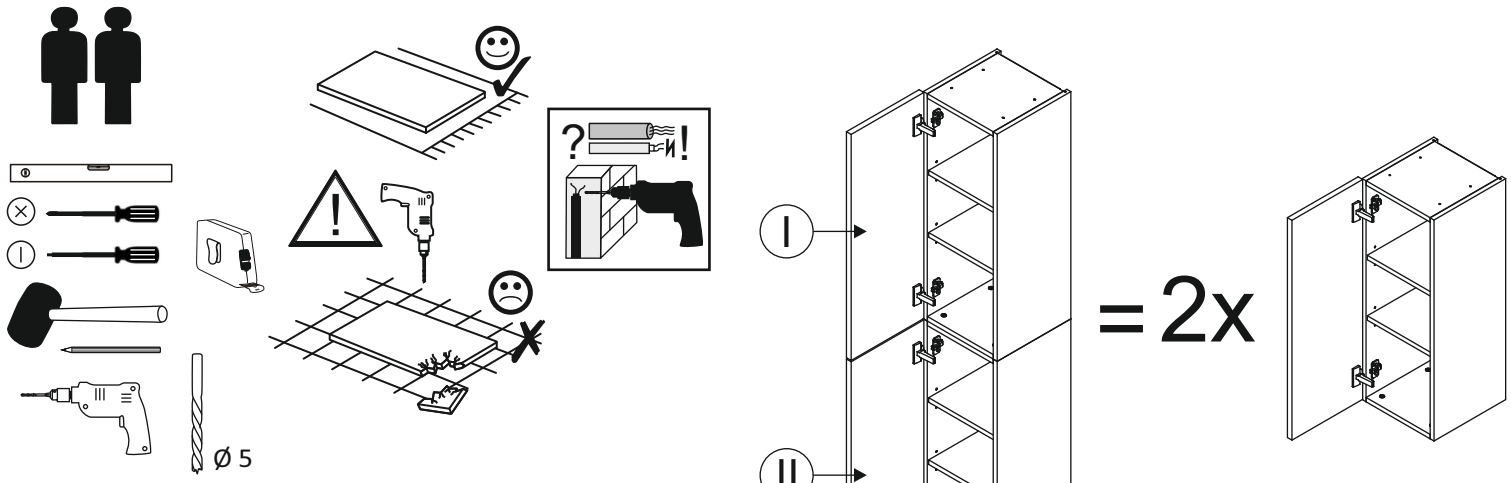

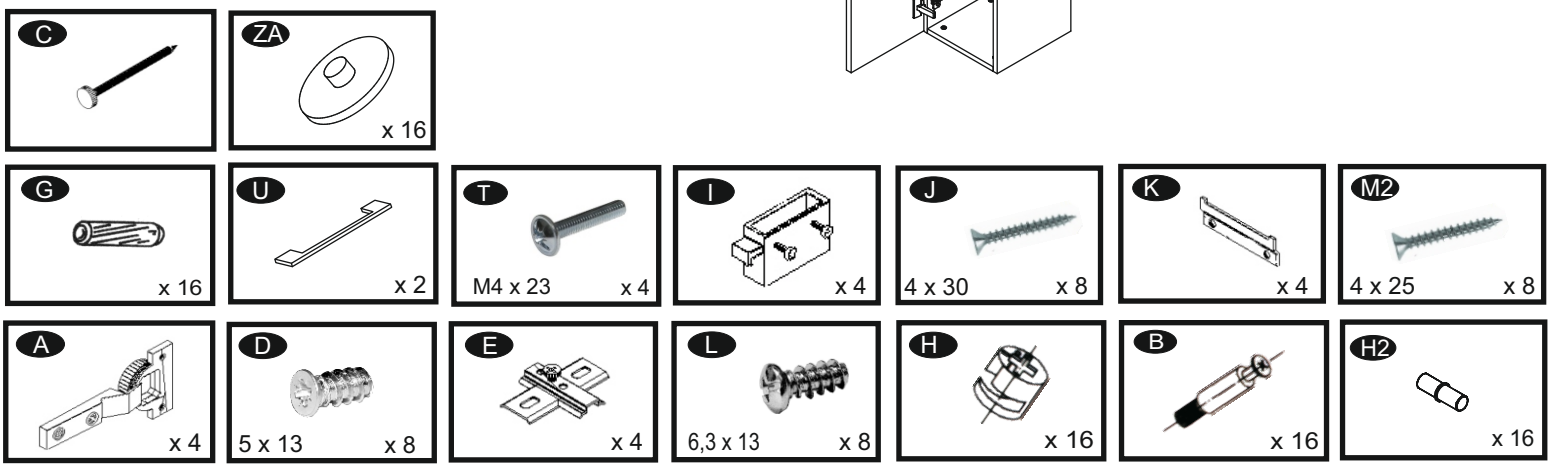

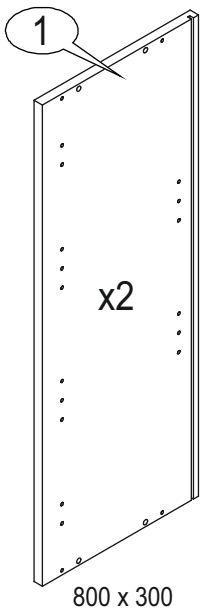

800 x 300

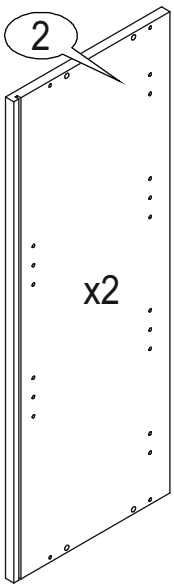

800 x 300

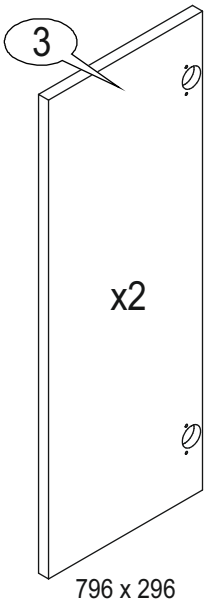

796 x 296

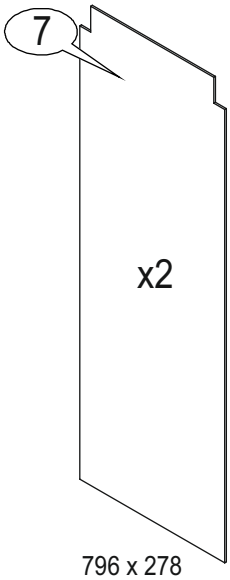

796 x 278

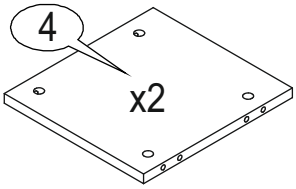

267 x 286

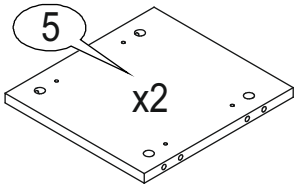

267 x 286

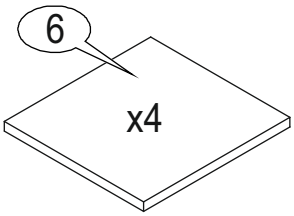

267 x 281

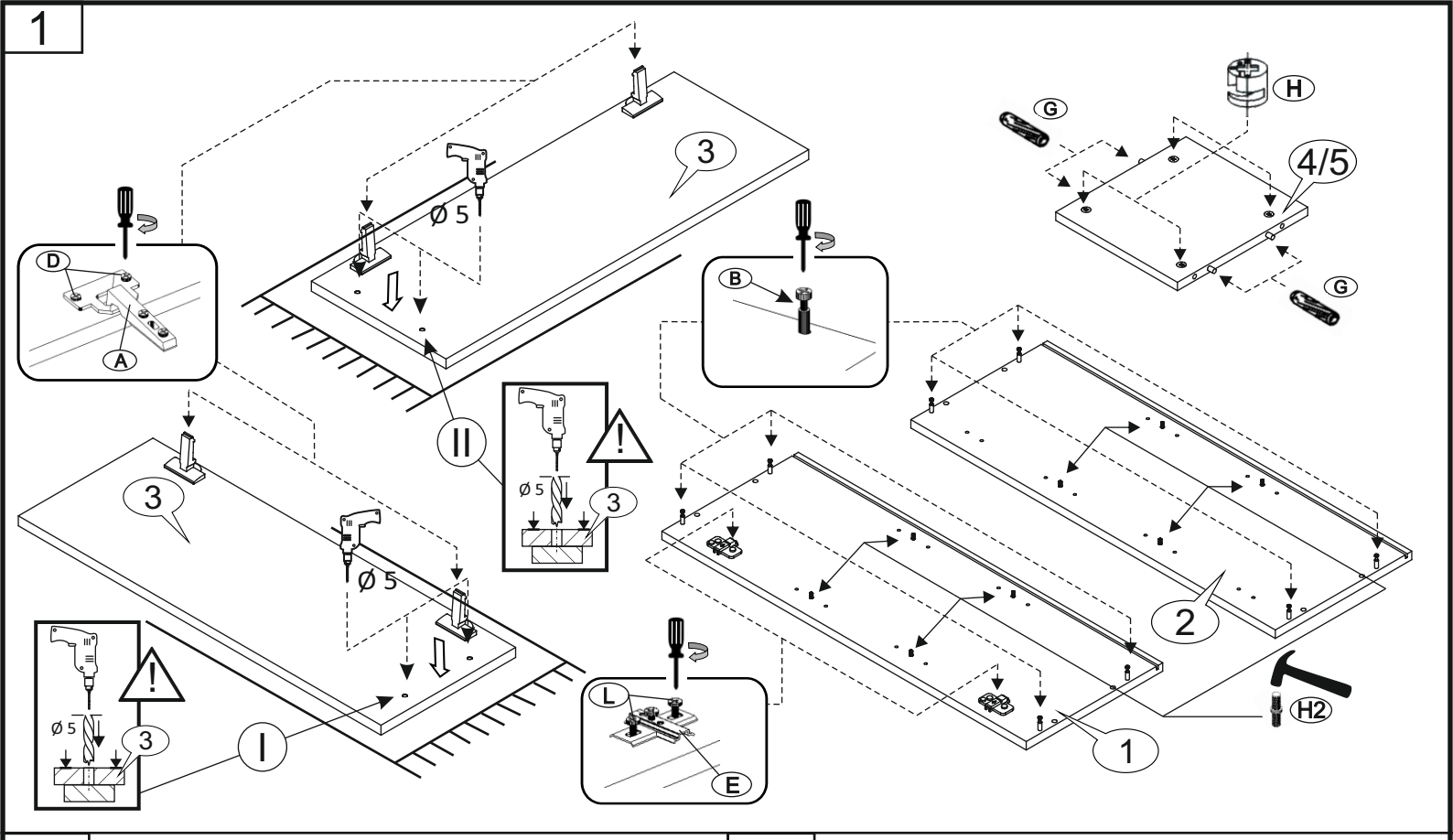
1
3
Ø 5
D
A
B
II
Ø 5
3
G
H
4/5
G
3
Ø 5
Ø 5
3
I
L
E
2
1
H2

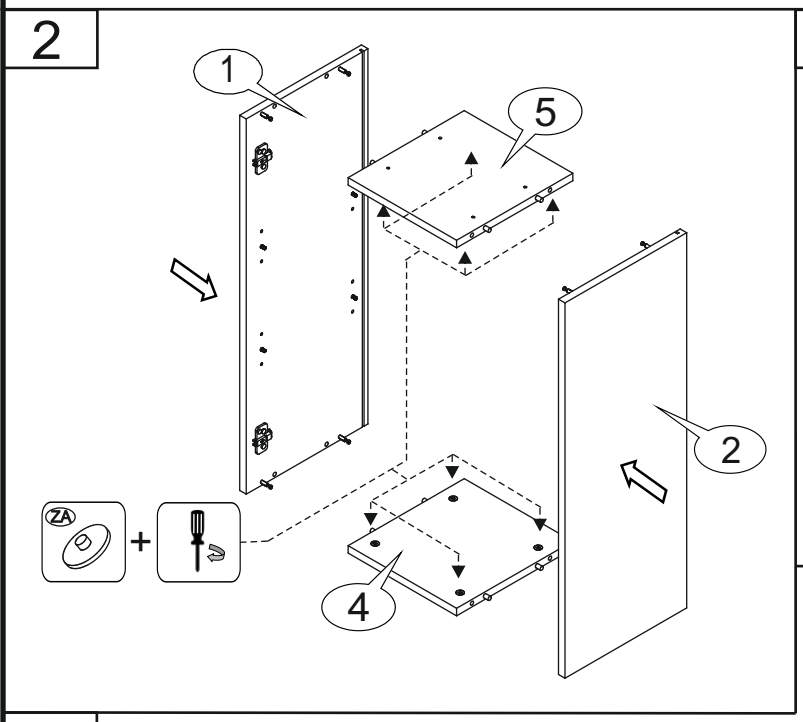
2
1
5
2
ZA
+
4

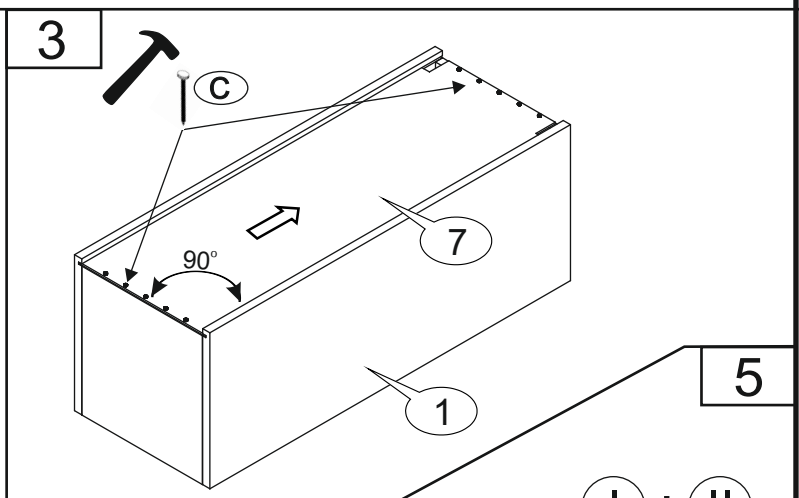
3
C
90°
7
1

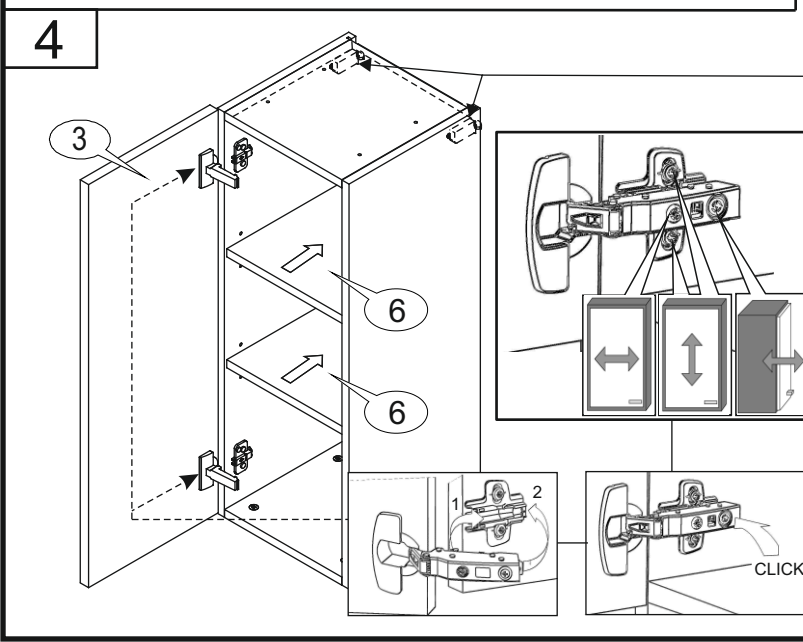
4
3
6
6
1
2
CLICK!!

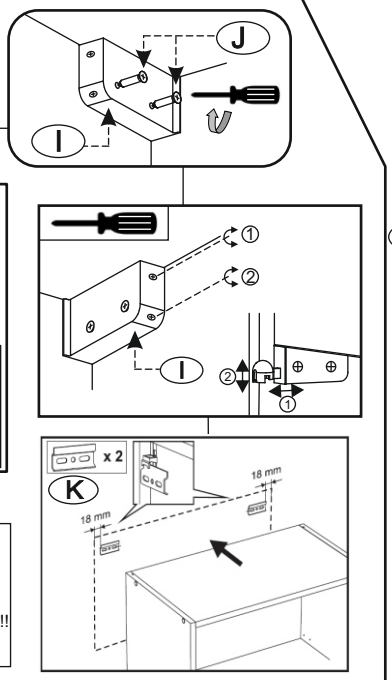
J
I
①
②
I
②
①
x 2
K
18 mm
18 mm

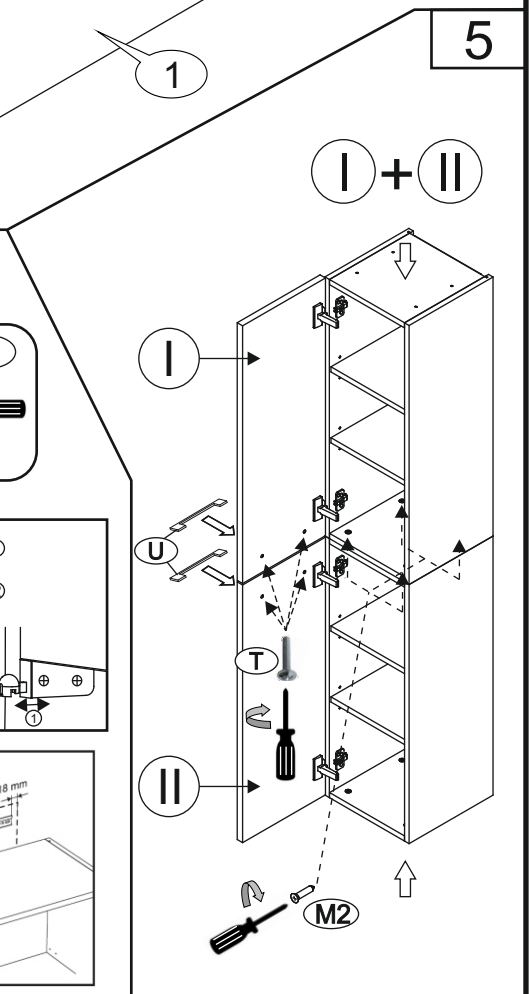
5
I + II
I
U
T
II
M2